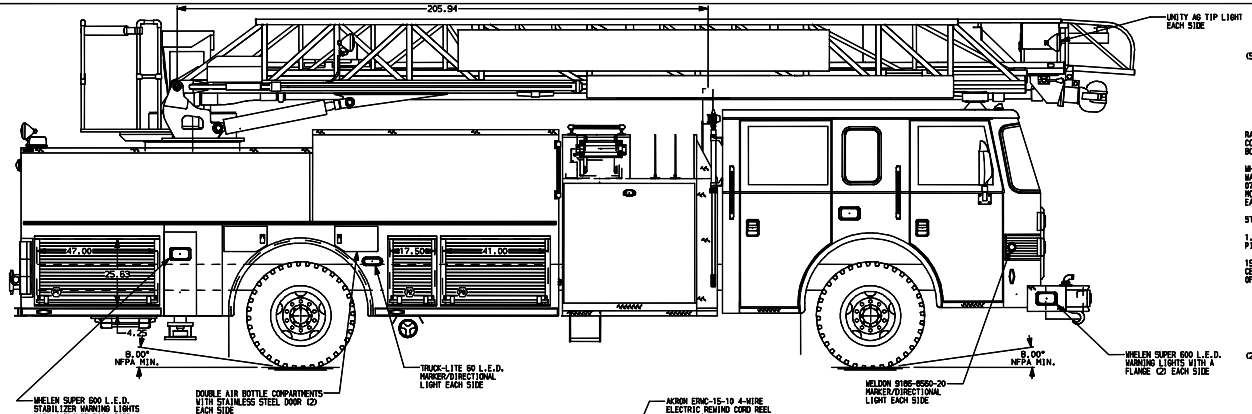

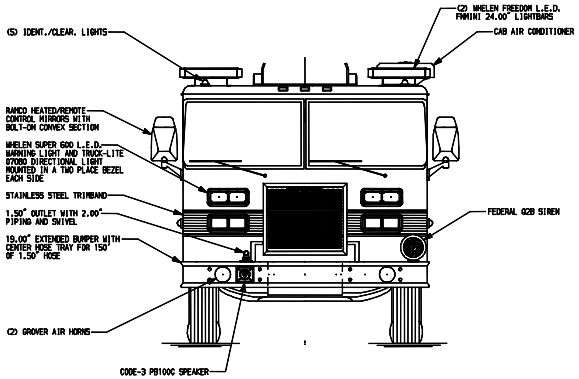

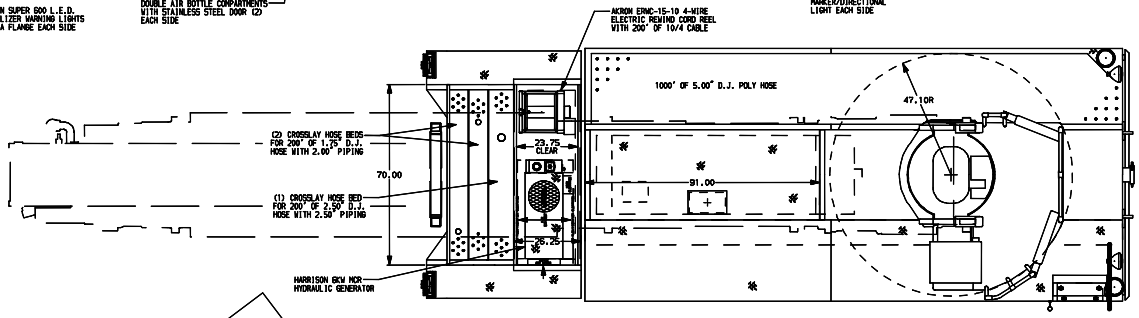

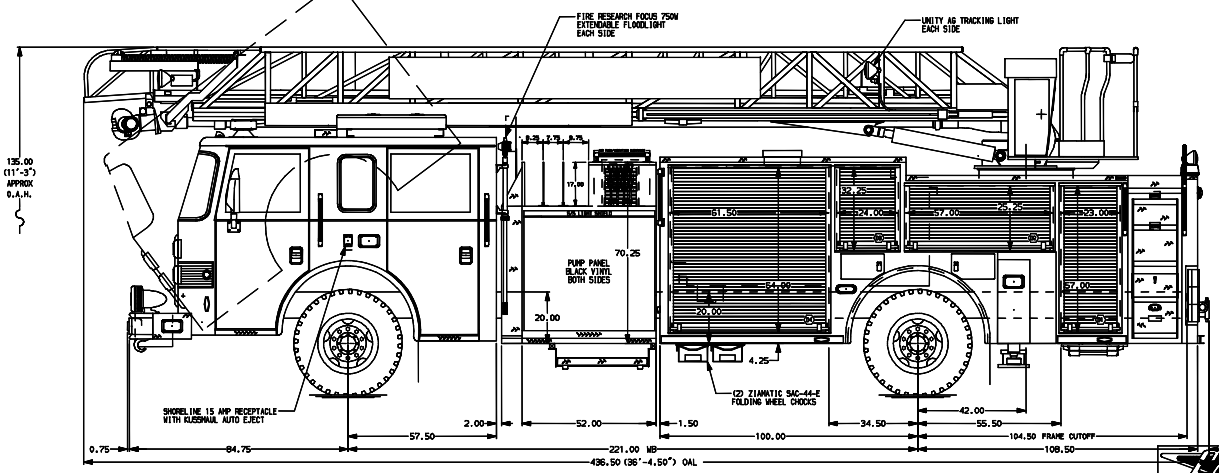

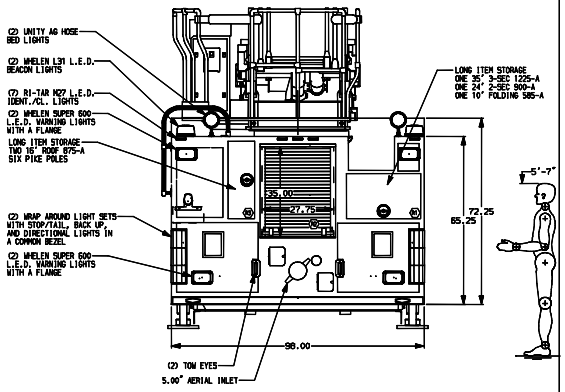

ALUMINUM BODY

NOTE

DIMENSIONS SHOWN ARE APPROXIMATE AND ARE SUBJECT TO MINOR DEVIATIONS AS MAY OCCUR OR BE NECESSARY IN CONSTRUCTION. MINOR DETAILS NOT SHOWN.

1. AIR INLET WITH DISCONNECT COUPLING LOCATED IN D.S. STEP WELL
2. MUD FLAPS WITH PIERCE LOGO AT FRONT AND REAR
3. (2) 4.50"X14.00" WINDOWS ON CREW CAB REAR WALL
4. STAINLESS STEEL FENDER CROWNS ON CAB AND REAR BODY
5. VEHICLE DATA RECORDER LOCATED PER SHOP ORDER
6. BATTERY CHARGER LOCATED IN COMPARTMENT-D4
7. RI-TAR M27 L.E.D. STEP LIGHTS LOCATED PER SHOP ORDER
8. SHELF TRACK LOCATED PER SHOP ORDER
9. 500 LB. ADJUSTABLE SHELVES IN COMPARTMENT-TWO IN D1,D4
10. AMDOR L.E.D. COMPARTMENT LIGHTS LOCATED PER SHOP ORDER
11. PERIMETER SCENE LIGHTS LOCATED PER SHOP ORDER
12. CIRCUIT BREAKER PANEL IN COMPARTMENT-D4
13. LUMINESCENT FOLDING STEPS MOUNTED ON THE AERIAL DEVICE PER SHOP ORDER
14. 120V POWER TO AERIAL TIP
15. RADIO INTERCOM SYSTEM MOUNTED PER SHOP ORDER

REV.	DATE	BY	CHK'D
-	-	-	-

Pierce MANUFACTURING INC.
APPLETON, WISCONSIN

CH45515 DATA	TITLE	75' HAL TCO AERIAL LADDER AND BODY ASSEMBLY 500 GALLON WATER TANK	
CH45515 PIERCE	FOR	PIERCE STOCK APPLETON, WI	
MODEL CONTENDER	DRWG. NO.	23687AD	

JOB NO.	23687
DATE	SCALE 1:24
30JUN10	DRAWN BY BST
30JUN10	CHK'D BY JBL
SHEET NO. 1 OF 1	SHEET SIZE D

View File Created 30-JUN-2010 15:45:20