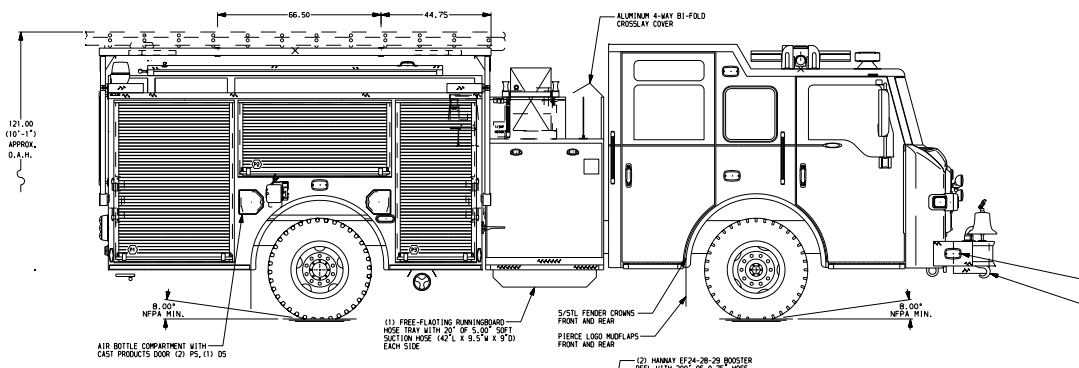

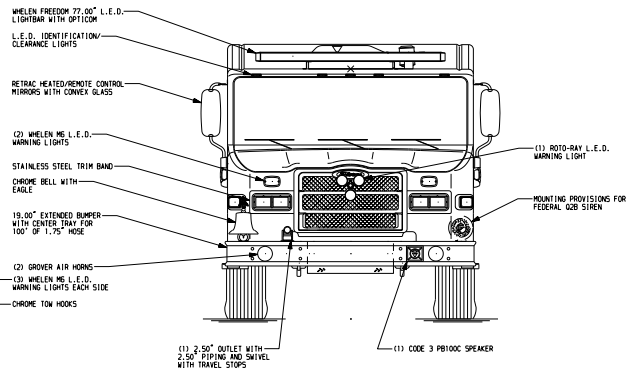

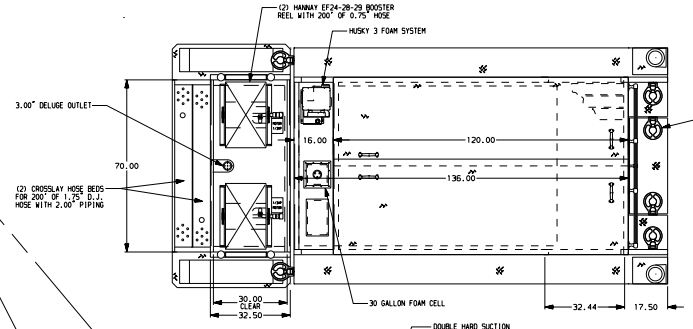

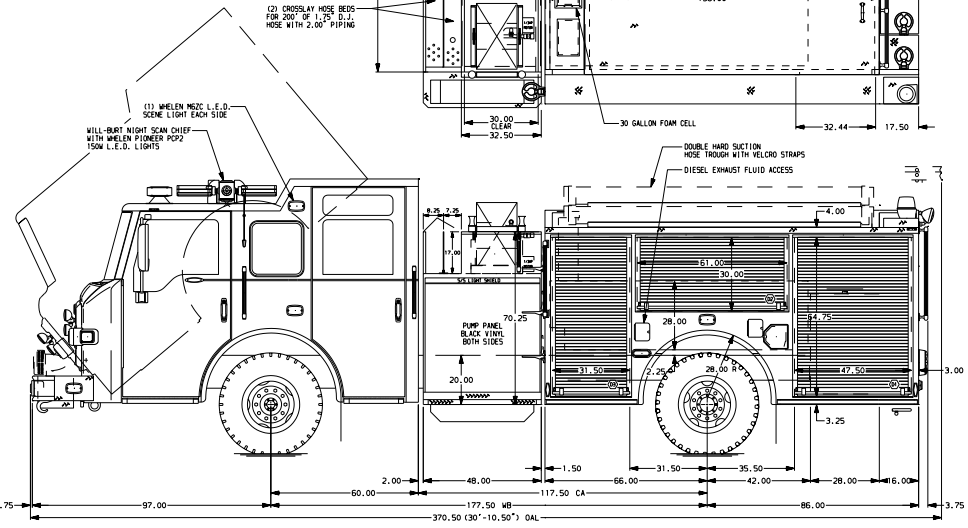

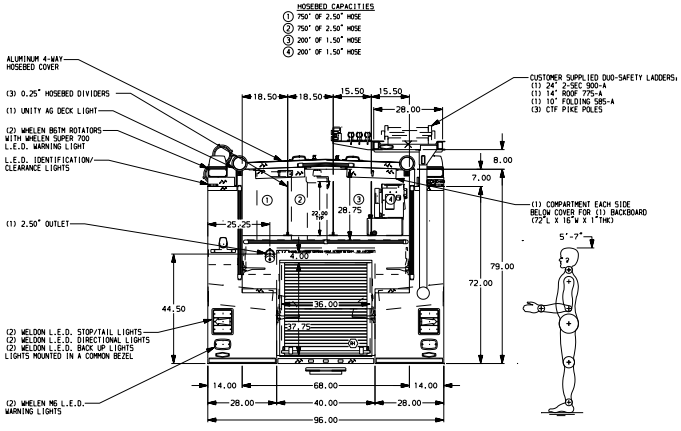

ALUMINUM BODY

NOTE

DIMENSIONS SHOWN ARE APPROXIMATE AND ARE SUBJECT TO MINOR DEVIATIONS AS MAY OCCUR OR BE NECESSARY IN CONSTRUCTION.
MINOR DETAILS NOT SHOWN.

1. CUSTOMER TO FURNISH WHEEL CHOCKS AND MOUNTING BRACKETS
2. MOUNTING BASE FOR ANTENNA LOCATED PER SHOP ORDER
3. BATTERY CHARGER LOCATED IN COMPARTMENT D3
4. BATTERY CHARGE INDICATOR LOCATED ON DRIVER SEAT WITH BRACKET
5. OEN 500 LB. FLOOR MOUNTED SLIDE-OUT TRAY WITH 2" SIDES IN COMPARTMENTS P1 & R1
6. ONE 250 LB. ADJUSTABLE SLIDE-OUT TRAY WITH 2" SIDES IN COMPARTMENT D3
7. ONE 215 LB. ADJUSTABLE TILT/SLIDE-OUT TRAY IN COMPARTMENT R1
8. ONE ALUMINUM SWING-OUT TOOLBOARD WITH PEGBOARD PATTERN IN COMPARTMENT P2
9. TWO 215 LB. ADJUSTABLE SHELVES IN COMPARTMENTS D1, P1, THREE IN D3 & FIVE IN P3
10. AMDOR L.E.D. COMPARTMENT LIGHTS IN ALL COMPARTMENTS
11. PERIMETER SCENE LIGHTS LOCATED PER SHOP ORDER
12. SHELF TRACKS LOCATED IN ALL COMPARTMENT WITH SHELVES
13. 20A SHORELINE RECEPTACLE WITH KUSSMAUL SUPER AUTO EJECT LOCATED ON D.S. PUMP PANEL
14. ONE AIR INLET WITH DISCONNECT COUPLING LOCATED ON D.S. PUMP PANEL

REV	DATE	BY	CH
V	25APR11	MBO	PJP
V	22MAR11	MBO	PJP

CHASSIS DATA — MAKE: PIERCE — MODEL: CONTENDER

Pierce MANUFACTURING INC.

TITLE: 1500-D-500 POLY,30 FOAM,152"BODY,DS & PS FULL HEIGHT 48"SIDE CONTROL,(2)CROSSLAYS

FOR: SNOHOMISH COUNTY FIRE DISTRICT #22, SNOHOMISH, WA

DWG NO.: 24368AD

JOB NO.	SCALE	DRAWN BY	CHECKED BY	SHEET SIZE	SHEET NO.
24368	1:24	BST	THI	D	1 OF 1

DATE: 10FEB11 — 14FEB11

View File Created 25-APR-2011 15:13:59