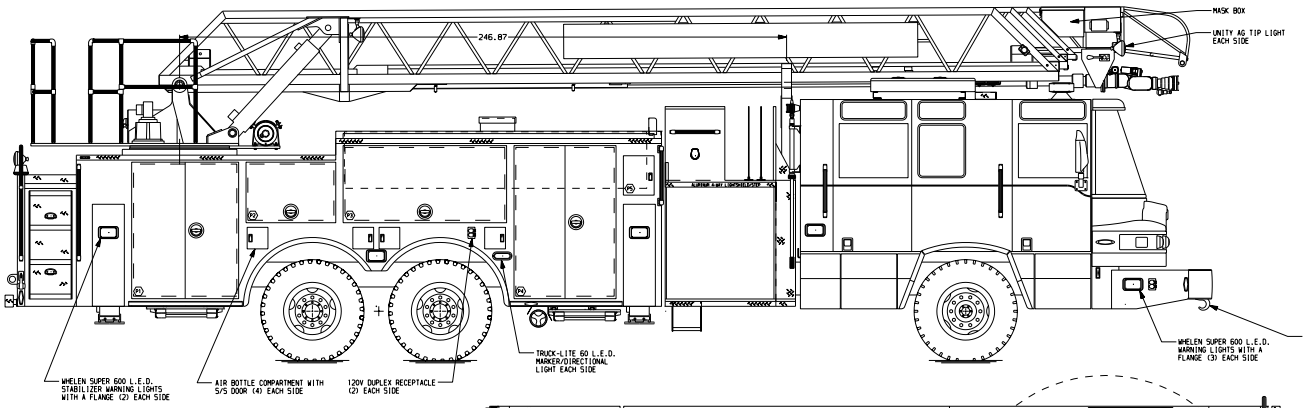

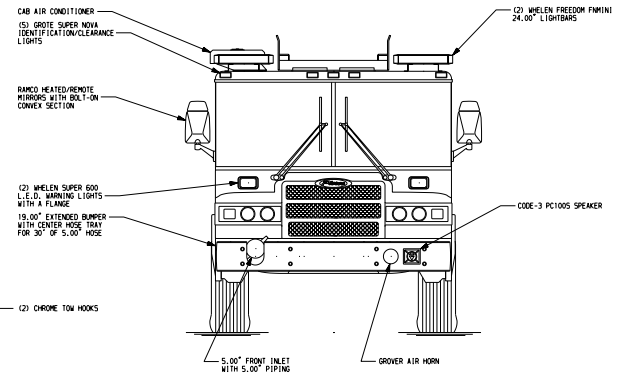

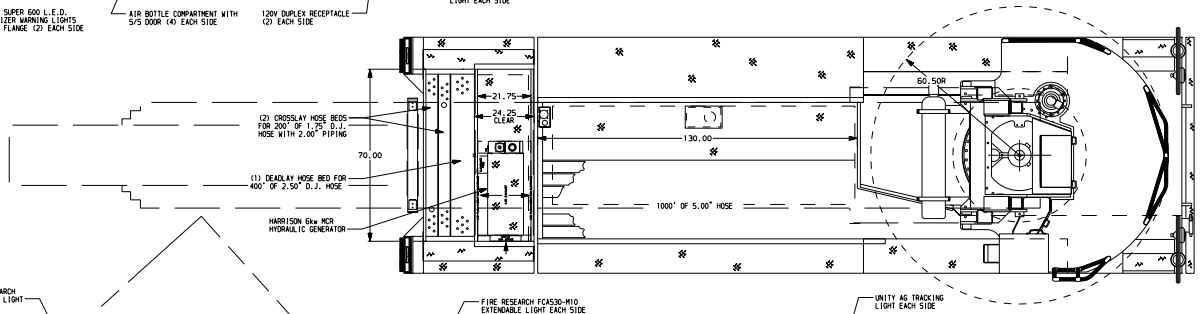

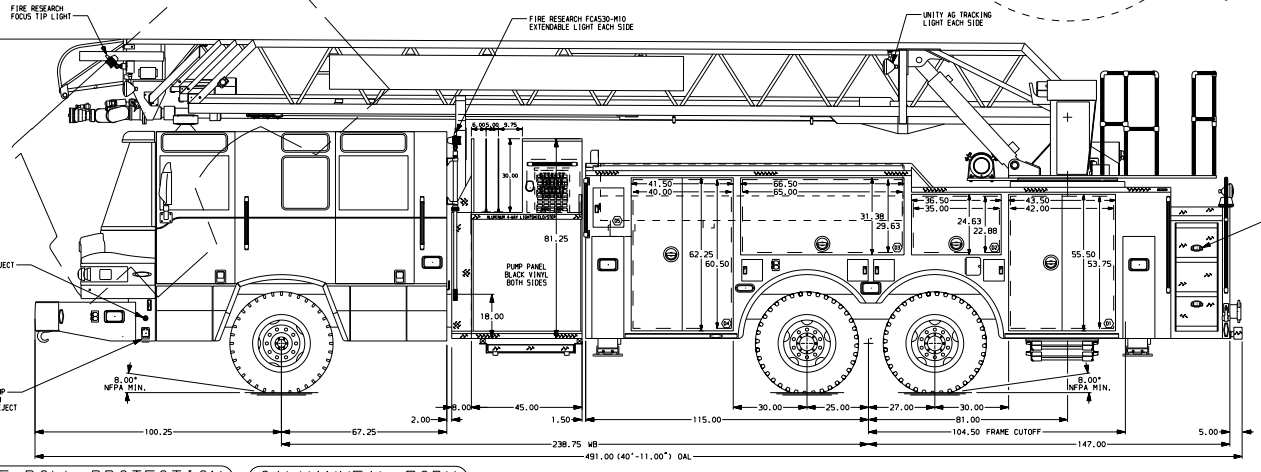

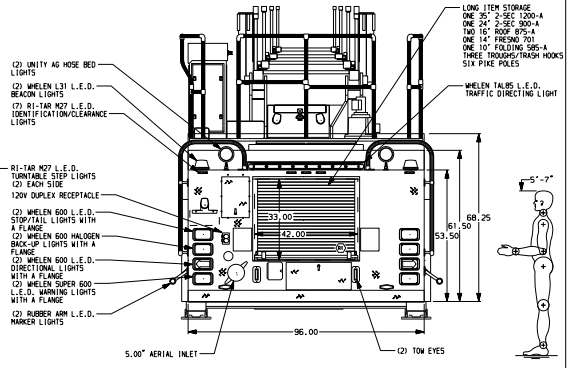

SIDE ROLL PROTECTION GALVANNEAL BODY

NOTE

DIMENSIONS SHOWN ARE APPROXIMATE AND ARE SUBJECT TO MINOR DEVIATIONS AS MAY OCCUR OR BE NECESSARY IN CONSTRUCTION.
MINOR DETAILS NOT SHOWN.

1. (2) 8.00"X14.00" WINDOWS ON CREW CAB REAR WALL
2. STAINLESS STEEL FENDER CROWNS ON CAB AND REAR BODY
3. RADIO INTERCOM SYSTEM MOUNTED PER SHOP ORDER
4. BATTERY CHARGER AND BATTERY INDICATOR MOUNTED IN SEAT RISER
5. STAINLESS STEEL SCUFFPLATES IN DOOR OF COMPARTMENT P1; 8" HIGH IN D1,D4,P4
6. 500 LB. FLOOR MOUNTED SLIDE-OUT TRAY IN COMPARTMENT-D1,D4,P1
7. ALUMINUM SWING-OUT TOOLBOARD IN COMPARTMENT P3
8. HORIZONTAL MOUNTING TRACKS IN COMPARTMENT-D2,D3,D4,P2,P3
9. ONE 215 LB. ADJUSTABLE SHELF IN COMPARTMENT D2, D4, P2, P3; TWO IN D1, P1; THREE IN P4
10. SHELF TRACK IN EACH COMPARTMENT EXCEPT D3
11. ONE VERTICAL PARTITION LOCATED IN COMPARTMENT P4
12. ADJUSTABLE SLIDE-OUT PEGBOARD IN COMPARTMENT P4
13. ONE 500# ADJUSTABLE SLIDE-OUT TRAY IN COMPARTMENT P1
14. PERIMETER SCENE LIGHTS LOCATED PER SHOP ORDER
15. CIRCUIT BREAKER PANEL IN COMPARTMENT-D5
16. LUMINESCENT FOLDING STEPS MOUNTED ON THE AERIAL DEVICE PER SHOP ORDER
17. 120V POWER TO AERIAL TIP
18. AERIAL PEDESTAL RAISED 7.00"

REV	DATE	BY	CH
3	25AUG08	BST	JBL
2	12AUG08	SHU	DJS
1	06JUN08	BST	JBL

CHASSIS DATA
MAKE PIERCE
MODEL QX56700

Pierce MANUFACTURING INC.

TITLE 105' AERIAL LADDER AND BODY ASSEMBLY 300 GALLON WATER TANK (21176PT)
FOR CITY OF KENNEWICK KENNEWICK, WA
DWG NO. 21176AD

JOB NO.	21176
SCALE 1:24	DATE
DRAWN BY BST	02JUN08
CHECKED BY JBL	03JUN08
SHEET SIZE D	SHEET NO. 1 OF 1

View File Created 26-AUG-2008 07:45:12