PASSENGER'S SIDE COMPARTMENTS CONTAIN THE FOLLOWING:

COMPARTMENT P1 CONTAINS:
- (4) ADJUSTABLE SHELVES
- (1) RACK FOR 5 SCBA BOTTLES
- (1) RACK FOR 5 AIR BAGS
- (1) ELECTRIC CABLE REEL
  W/ 200' OF 10/3 CABLE
-

COMPARTMENT P2 CONTAINS:
- (1) NORCOLD 2.7 CU FT REFRIGERATOR
- (1) ADJUSTABLE SHELF
- (1) RECEPTACLE FOR REFRIGERATOR
- (1) GENERATOR METER PANEL
- (1) SUB FEED BOX
- (1) CIRCUIT BREAKER PANEL
- (1) CIRCUIT BREAKER PANEL

COMPARTMENT P3 CONTAINS:
- (1) 42" DP ADJ SLIDE OUT/TILT DOWN TRAY
- (1) 85" DP ADJ SLIDE OUT TRAY
- (1) TOOLBOARD IN TRAY
- (1) SET OF 3 DRAWERS
-
-
-
-

COMPARTMENT P4 CONTAINS:
- (1) STOKES BASKET RACK
- (1) 22" DP SLIDE OUT TRAY
- (1) 42" DP ADJ SLIDE OUT/TILT DOWN TRAY
- (1) 85" DP ADJ SLIDE OUT TRAY
- (1) NIGHT SCAN CONTROLLER
- (1) RACK FOR 1 BACKBOARD
- (1) 42" DP SLIDE OUT TRAY
-
-

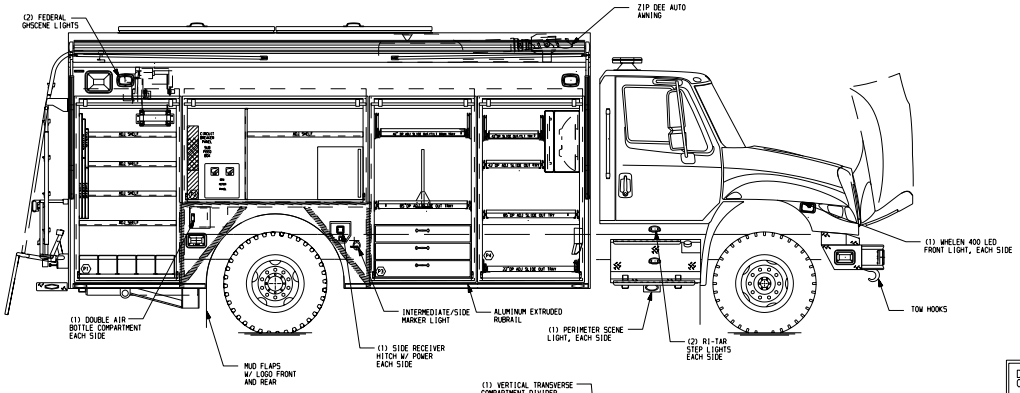

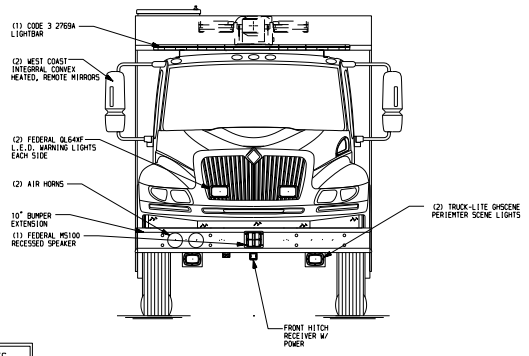

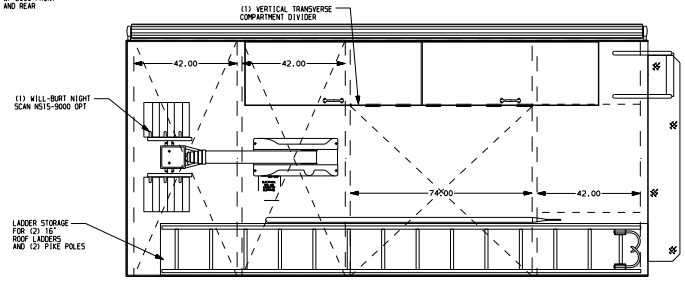

DRIVER'S SIDE COMPARTMENTS CONTAIN THE FOLLOWING:

COMPARTMENT D1 CONTAINS:
- (3) ADJUSTABLE SHELVES
- (1) 22" DP SLIDE OUT TRAY
-
-
-
-
-
-

COMPARTMENT D2 CONTAINS:
- (1) 42"DP ADJ SLIDE OUT TRAY
-
-
-

COMPARTMENT D3 CONTAINS:
- (1) 42" DP ADJ SLIDE OUT/TILT DOWN TRAY
- (1) 85" DP ADJ SLIDE OUT TRAY
- (1) TOOLBOARD IN TRAY
-
-
-
-
-

COMPARTMENT D4 CONTAINS:
- (1) KUSSMAUL 091-9 AIR COMPESSOR FOR BRAKE SYSTEM
- (1) KUSSMAUL AUTO CHARGE 4000
- (1) STOKES BASKET RACE
- (1) 22" DP SLIDE OUT TRAY
- (1) RACK FOR 1 BACKBOARD
- (1) 42" DP SLIDE OUT TRAY
- (1) 85" DP ADJ SLIDE OUT TRAY
- (1) 42" DP ADJ SLIDE OUT/TILT DOWN TRAY

REAR COMPARTMENT CONTAINS THE FOLLOWING:

COMPARTMENT R1 CONTAINS:
- (1) 42" FLOOR MOUNTED TRAY
- (3) 42" ADJ SLIDE OUT TRAY
- (2) HYDRAULIC REELS W/ 100' OF CORD
- (1) RACK FOR 2 PIKE POLES
  - (1) 8' LONG PIKE POLE
  - (1) 12' LONG PIKE POLE
-
-
-
-
-
-
-
-

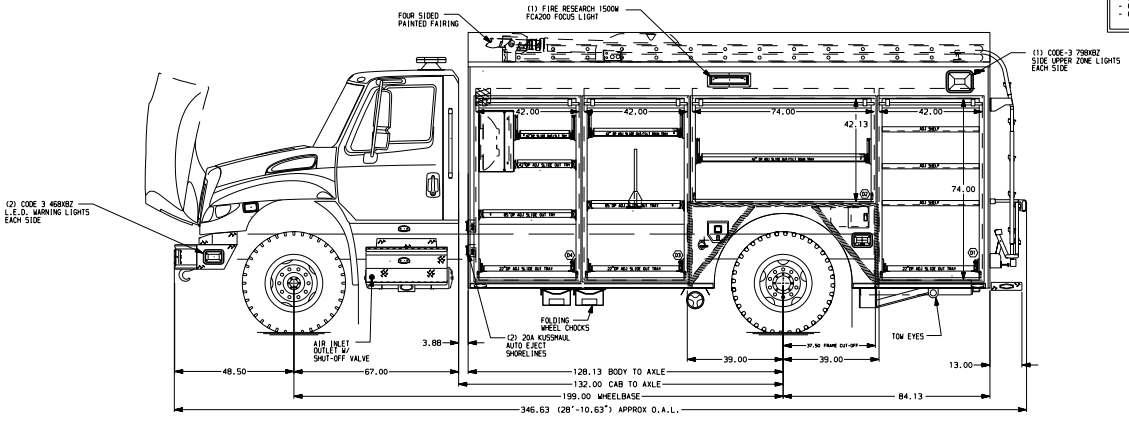

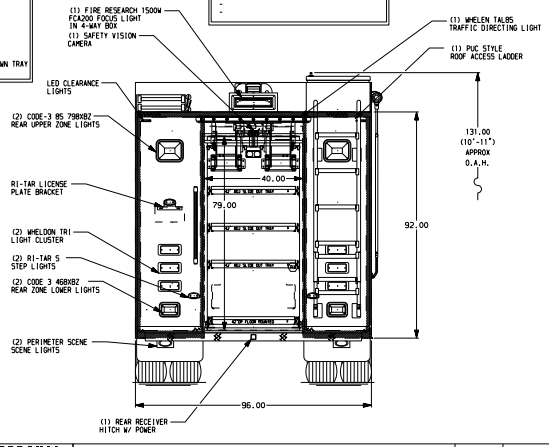

NOTE
DIMENSIONS SHOWN ARE APPROXIMATE AND ARE SUBJECT TO MINOR DEVIATIONS AS MAY OCCUR OR BE NECESSARY IN CONSTRUCTION.
MINOR DETAILS NOT SHOWN.

NOTES:
1) LED TRUCK-LITE 44207C COMPARTMENT LIGHTS
2) ONAN 25kW SINGLE PHASE PTO DRIVEN GENERATOR BETWEEN FRAME RAILS WITH SPLASH GUARD

REV	DATE	BY	CH
3	05NOV08	EWI	TEO
2	07OCT08	EWI	TEO
1	02JUN08	EWI	TEO

CUSTOMER APPROVAL
APPROVED BY:
DATE:

Pierce MANUFACTURING INC.

CHASSIS DATA	
MAKE	IHC
MODEL	4400
TITLE	ENCORE RESCUE VEHICLE 42.42.74.42
FOR	NORTH LINCOLN FIRE & RESCUE DIST 1 NORTH LINCOLN,OR
DWG NO.	21119AD
JOB NO.	21119
SCALE	1:24
DATE	
DRAWN BY	EWI 19MAY08
CHECKED BY	TEO 26MAY08
SHEET SIZE	D
SHEET NO.	1 OF 1

View File Created 06-NOV-2008 10:21:45