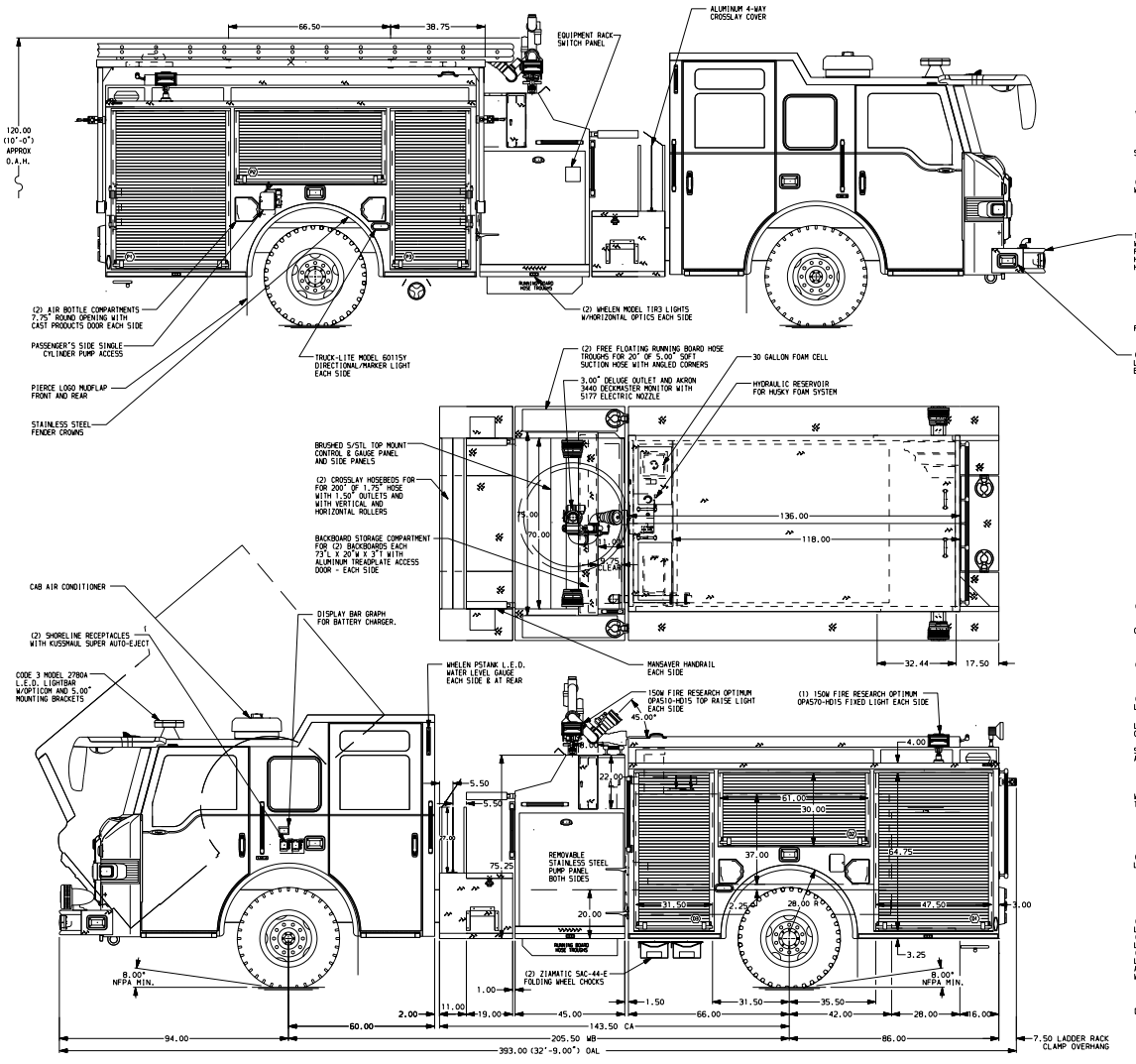

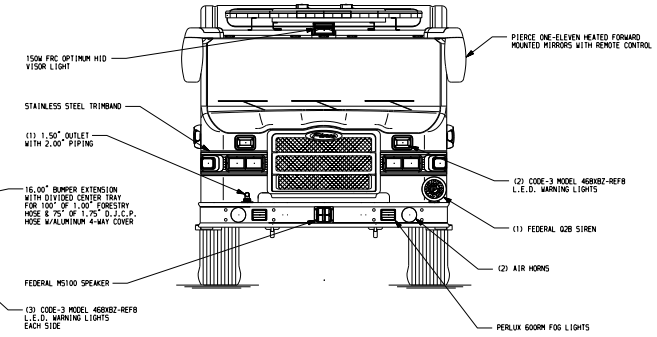

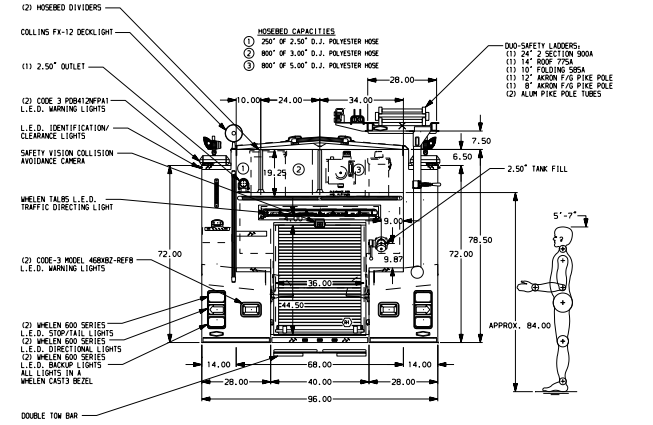

ALUMINUM BODY | MAXIMUM O.A.L. 396.00" | MAXIMUM O.A.H. 120.00" | SIDE ROLL PROTECTION

NOTE

DIMENSIONS SHOWN ARE APPROXIMATE AND ARE SUBJECT TO MINOR DEVIATIONS AS MAY OCCUR OR BE NECESSARY IN CONSTRUCTION.
MINOR DETAILS NOT SHOWN.

1. S/STL SCUFFPLATE ON EACH CAB DOOR JAMB
2. ONE ADJUSTABLE SLIDE-OUT TRAY IN COMPARTMENT D1, D3, P1, P3 & R1
3. TURTLE TILE MATTING IN COMPARTMENT P2
4. TURTLE TILE MATTING ON LOCATED ON ALL SHELVES AND TRAYS
5. AIR INLET/OUTLET WITH DISCONNECT FITTING LOCATED IN D5 STEP WELL
6. COMPARTMENT VENTILATION SYSTEM WITH TIMER
7. ONE ADJUSTABLE SHELF IN COMPARTMENT P2 & R1; TWO EACH IN D1, D3, P1 & P3
8. TWO DUPLEX RECEPTACLES LOCATED IN CAB
9. BATTERY CHARGER LOCATED BEHIND DRIVER'S SEAT
10. ONE SWING OUT TOOL BOARD FORWARD HINGED IN COMPARTMENT D2
11. STAINLESS STEEL GUARDS FOR ALL ROLL-UP COMPARTMENT DOORS

CUSTOMER APPROVAL

APPROVED BY: _____

DATE: _____

REV	DATE	BY	CH
7	11SEP08	BZI	KBO
6	29AUG08	BZI	KBO
5	09JUN08	BZI	KBO
4	28MAY08	BZI	KBO

CHASSIS DATA
MAKE PIERCE
MODEL IMPEL

Pierce MANUFACTURING INC.

TITLE: 1500-D-750 GAL POLY W/30 GAL FOAM CELL, 152" BODY FULL HGHT FRT & RR, FULL DPTH LOWR EXT RR BOTH SIDES

FOR: NORTH LINCOLN FIRE AND RESCUE DISTRICT #1 LINCOLN CITY, OREGON

DWG NO. 21136AD

JOB NO.	21136
SCALE	1:24
DATE	
DRAWN BY	BZI 15MAY08
CHECKED BY	KBO 19MAY08
SHEET SIZE	D
SHEET NO.	1 OF 1

View File Created 11-SEP-2008 14:30:02