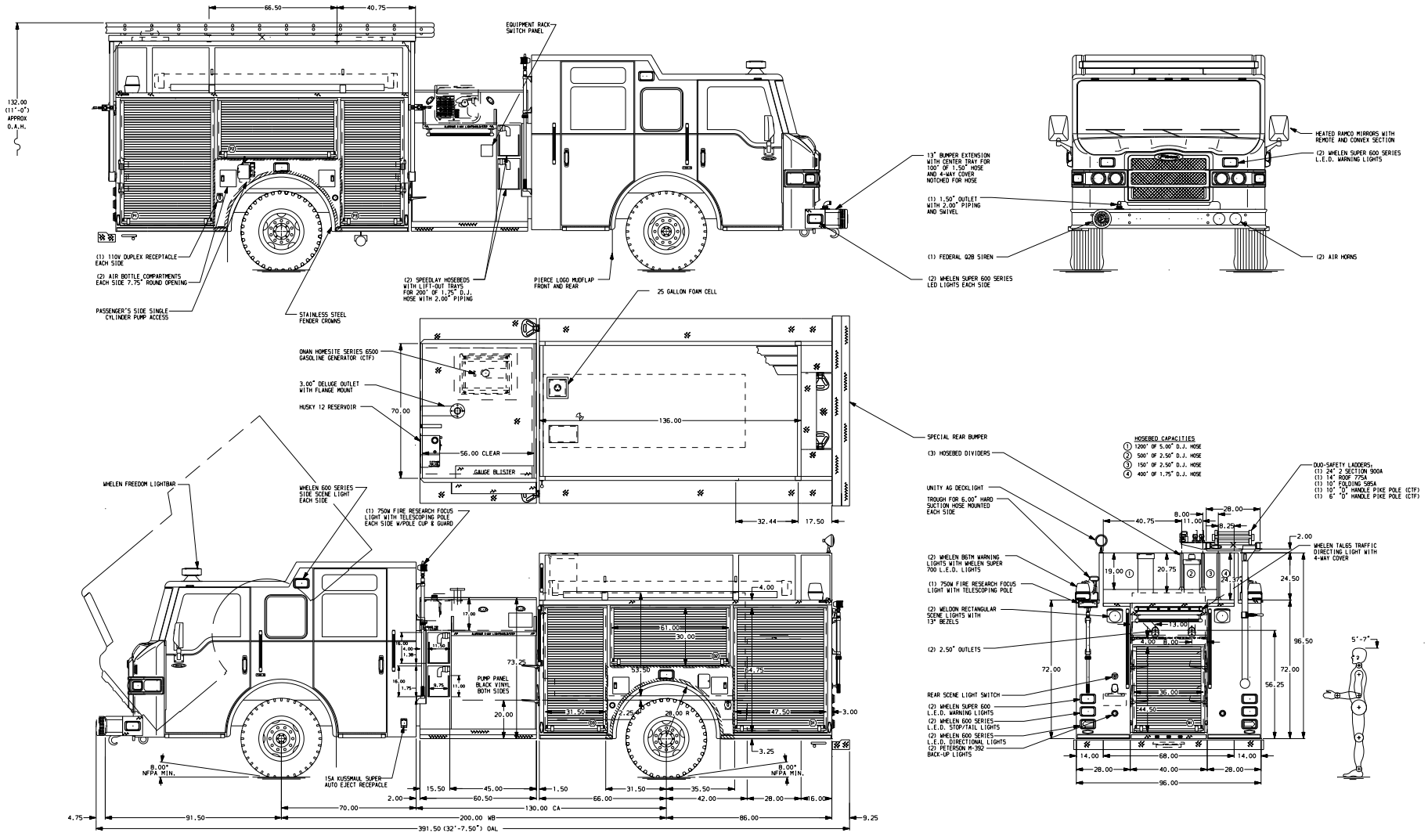

ALUMINUM BODY

NOTE

DIMENSIONS SHOWN ARE APPROXIMATE AND ARE SUBJECT TO MINOR DEVIATIONS AS MAY OCCUR OR BE NECESSARY IN CONSTRUCTION.
MINOR DETAILS NOT SHOWN.

1. MOUNTING BASE FOR ANTENNA LOCATED PER SHOP ORDER
2. BATTERY CHARGER LOCATED IN COMPARTMENT D3
3. S/STL PROTECTIVE GUARD FOR ROLL-UP DOOR LOCATED ALL ROLL-UP DOORS
4. ONE FLOOR MOUNTED SLIDE-OUT TRAY IN COMPARTMENT R1
5. ONE ADJUSTABLE TILTING SLIDE-OUT TRAY IN COMPARTMENT D2
6. ONE VERTICAL PARTITION IN CENTER OF COMPARTMENT D3
7. ONE PIVOTING ALUMINUM TOOL BOARD IN FORWARD 1/3 OF COMPARTMENT P2 WALL
8. ONE ALUMINUM SLIDE-OUT TOOL BOARD IN REARWARD PORTION OF COMPARTMENT D3
9. TWO ADJUSTABLE SHELF IN COMPARTMENTS D1, D3, P1, P2 AND P3
10. ADDITIONAL COMPARTMENTS LIGHT IN COMPARTMENTS D2 AND P2
11. CIRCUIT BREAKER PANEL IN COMPARTMENT D3
12. AIR INLET/OUTLET LOCATED ON BOTH PUMP PANELS

CUSTOMER APPROVAL

APPROVED BY: _____

DATE: _____

REV	DATE	BY	CH
1	07SEP07	BZI	THI
2	23AUG07	BZI	THI
3	04MAY07	BZI	THI

CHASSIS DATA
MAKE: PIERCE
MODEL: VX7010

Pierce MANUFACTURING INC.

TITLE: 1500-D-750 GAL POLY W/25 GAL FOAM CELL 152" BODY FULL HGHT & DPTH FRONT & REAR, DELUGE OUTLET

FOR: BUTTE-SILVERBOW FIRE DEPARTMENT BUTTE, MONTANA

DWG NO. 19726AD

JOB NO. 19726 01,02

SCALE 1:24

DATE

DRAWN BY BZI 05APR07

CHECKED BY THI 05APR07

SHEET SIZE D

SHEET NO. 1 OF 1

View File Created 07-SEP-2007 14:02:48