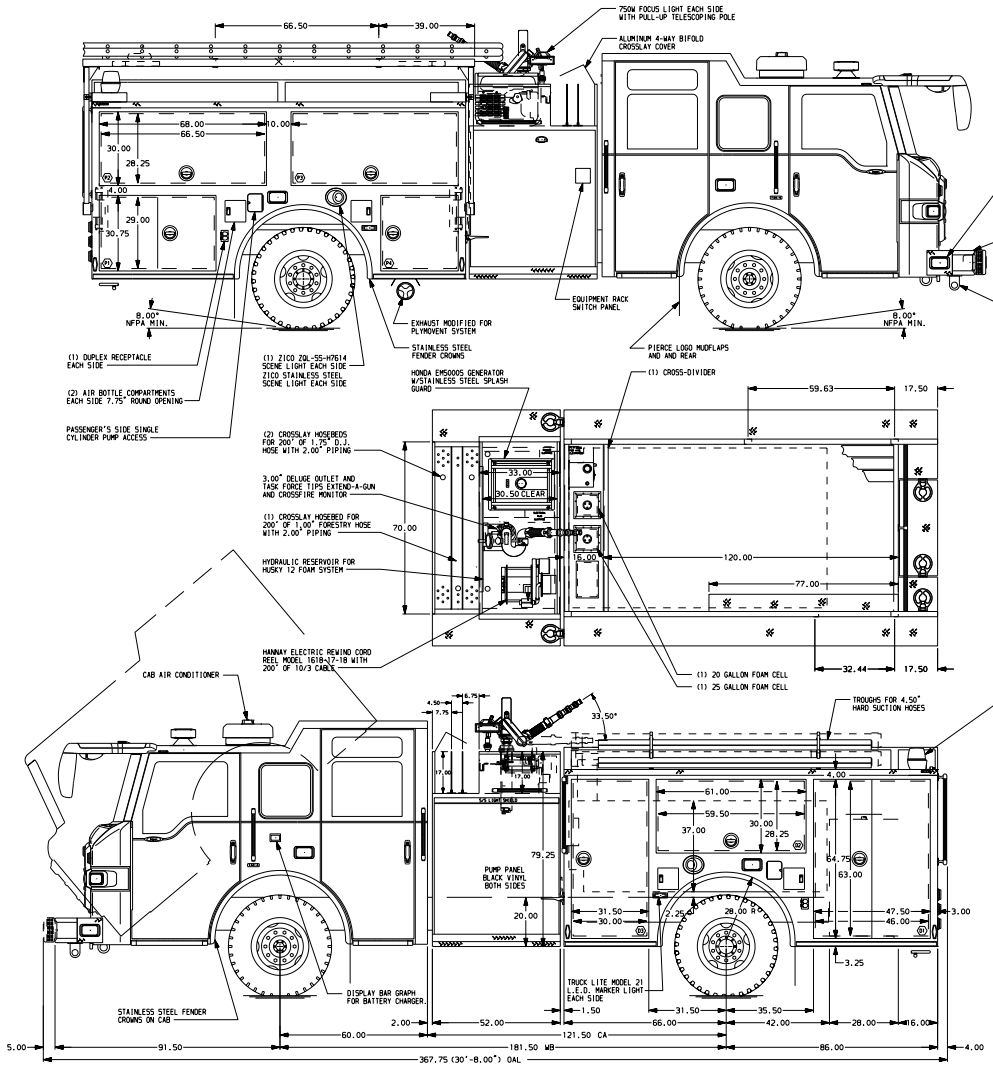

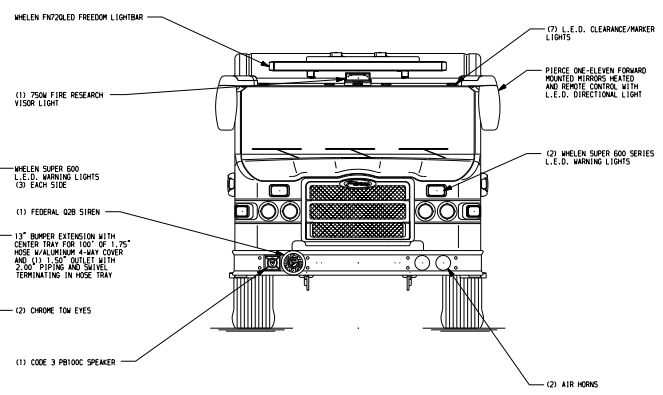

HOSEBED CAPACITIES
1. HOTEL PACK STORAGE
2. 700' OF 3.00" D.J. POLYESTER HOSE
3. 700' OF 5.00" D.J. POLYESTER HOSE

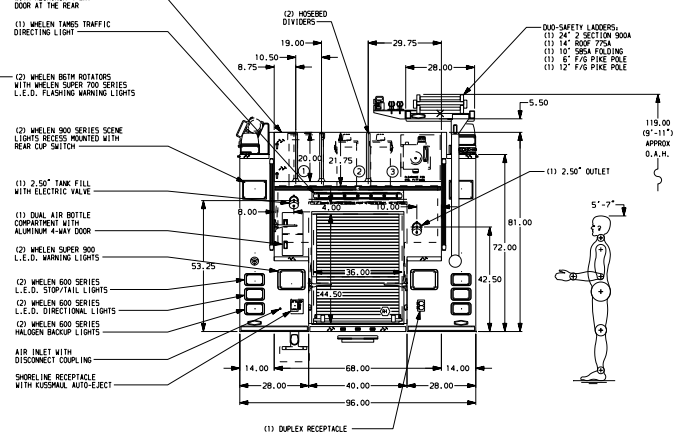

ALUMINUM BODY

NOTE

DIMENSIONS SHOWN ARE APPROXIMATE AND ARE SUBJECT TO MINOR DEVIATIONS AS MAY OCCUR OR BE NECESSARY IN CONSTRUCTION.
MINOR DETAILS NOT SHOWN.

1. S/STL SCUFFPLATE ON EACH CAB DOOR JAMB
2. RADIO ANTENNA LOCATED PER SHOP ORDER
3. REVERSED HINGED DOOR ON COMPARTMENT D3
4. S/STL SCUFFPLATE (8.00" HIGH) ON INSIDE DOOR OF ALL SIDE COMPARTMENTS
5. ONE FLOOR MOUNTED SLIDE-OUT TRAY IN COMPARTMENTS D1, D3, R1, P1 & P4
6. ONE ADJUSTABLE SLIDE-OUT TRAY IN COMPARTMENTS D3
7. BOLT-IN PARTITION BETWEEN COMPARTMENTS D1/R1 & P1/R1
8. HORIZONTAL EQUIPMENT MOUNTING TRACKS IN COMPARTMENTS D2 & P2
9. ONE ADJUSTABLE SHELF IN COMPARTMENTS D3, R1, P4 & P1, TWO ADJUSTABLE SHELVES IN COMPARTMENT D1
10. PERIMETER SCENE LIGHTS LOCATED PER SHOP ORDER
11. CIRCUIT BREAKER PANEL LOCATED IN COMPARTMENT D3
12. BATTERY CHARGER LOCATED IN COMPARTMENT D3

CUSTOMER APPROVAL

APPROVED BY: _____

DATE: _____

REV.	DATE	BY	CHK'D	
V	13MAR08	BZI	KBO	CHASSIS DATA
V	31JAN08	BZI	THI	CHASSIS
V	15JAN08	BZI	THI	PIERCE
V	11DEC07	BZI	THI	MODEL
				IMPEL

Pierce MANUFACTURING INC.
APPLETON, WISCONSIN

TITLE	1250-D-750P W/20 & 25 GAL FOAM CELL-(2)XLAYS-152" BODY W/LIFTUP5-HYD LADDER RACK-(3) CROSSLAYS	JOB NO.	20503
		DATE	SCALE 1:24
FOR	JACKSON COUNTY FIRE DISTRICT #3 WHITE CITY, OREGON	30NOV07	DRAWN BY BZI
		03DEC07	CHK'D BY THI
DRWG. NO.	20503AD	SHEET NO. 1 OF 1	SHEET SIZE D

View File Created 13-MAR-2008 09:39:02