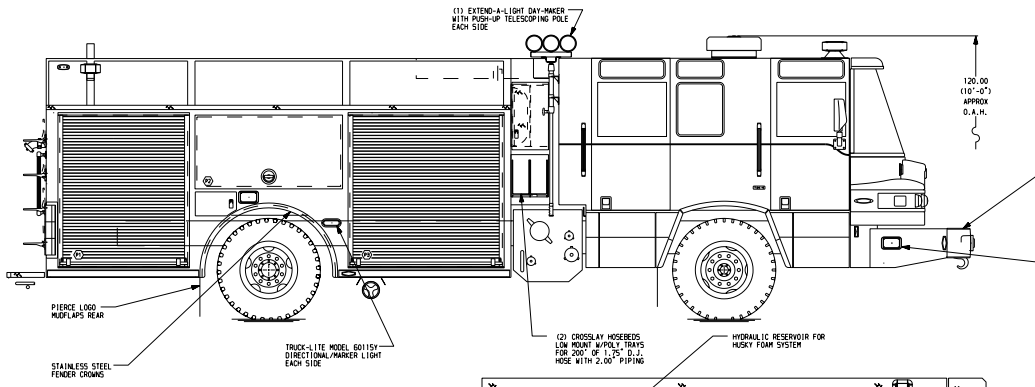

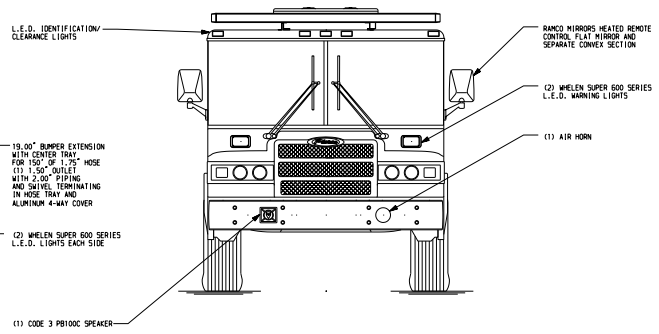

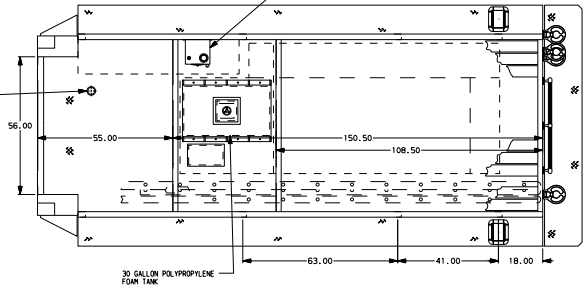

HOSEBED CAPACITIES

1. 300' OF 2.50" D.J. POLYESTER HOSE
2. 200' OF 1.75" D.J. POLYESTER HOSE
3. 150' OF 1.75" D.J. POLYESTER HOSE
4. 1000' OF 5.00" D.J. POLYESTER HOSE
5. 150' OF 2.50" D.J. POLYESTER HOSE

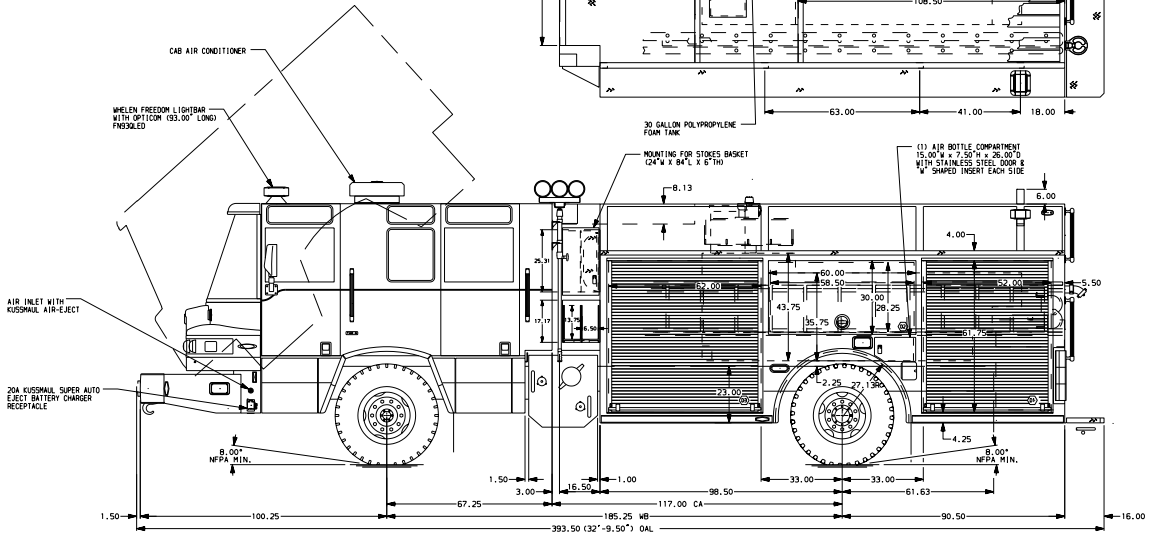

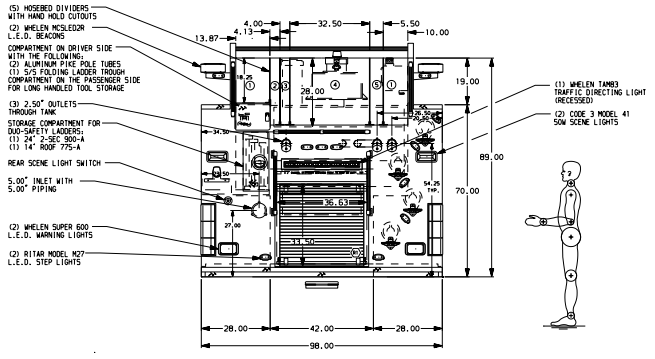

ALUMINUM BODY

SIDE ROLL PROTECTION

NOTE

DIMENSIONS SHOWN ARE APPROXIMATE AND ARE SUBJECT TO MINOR DEVIATIONS AS MAY OCCUR OR BE NECESSARY IN CONSTRUCTION.
MINOR DETAILS NOT SHOWN.

1. KUSSMAUL 4000 BATTERY CHARGER LOCATED ON CREW CAB REAR WALL
2. ONE FLOOR MOUNTED SLIDE-OUT TRAY IN COMPARTMENTS D1, P1, P3 & R1
3. ONE ADJUSTABLE SLIDE-OUT TRAY IN COMPARTMENTS P1 & P3
4. ONE ADJUSTABLE TILTING SLIDE-OUT TRAY IN COMPARTMENT P3
5. ONE SLIDE OUT TOOLBOARD IN COMPARTMENT P3
6. ONE ADJUSTABLE HEIGHT BRUSHED ALUMINUM SHELF IN COMPARTMENT D3; TWO EACH IN D1 & P1
7. ONE VERTICAL PARTITION LOCATED IN COMPARTMENT P3
8. BATTERY CHARGER INDICATOR LOCATED ON DRIVER SEAT RISER
9. PERIMETER SCENE LIGHTS LOCATED PER SHOP ORDER

CUSTOMER APPROVAL
APPROVED BY: _____
DATE: _____

REV	DATE	BY	CH
7	30NOV09	SHI	KBO
6	24NOV09	SHI	KBO
5	06NOV09	SHI	KBO
4	15OCT09	SHI	KBO

CHASSIS DATA
MAKE: PIERCE
MODEL: QUANTUM

Pierce MANUFACTURING INC.

TITLE: 1500-D-750 GAL POLY W/30 GAL POLY FOAM TANK, 189" BODY, HUSKY 12 FOAM SYSTEM, (2) CROSSLAY W/TRAYS
FOR: KENNEWICK FIRE DEPARTMENT, KENNEWICK, WASHINGTON
DWG NO. 22744AD

JOB NO. 22744
SCALE 1:24
DATE
DRAWN BY SHI 05OCT09
CHECKED BY BZI 05OCT09
SHEET SIZE D
SHEET NO. 1 OF 1

View File Created 30-NOV-2009 13:16:57