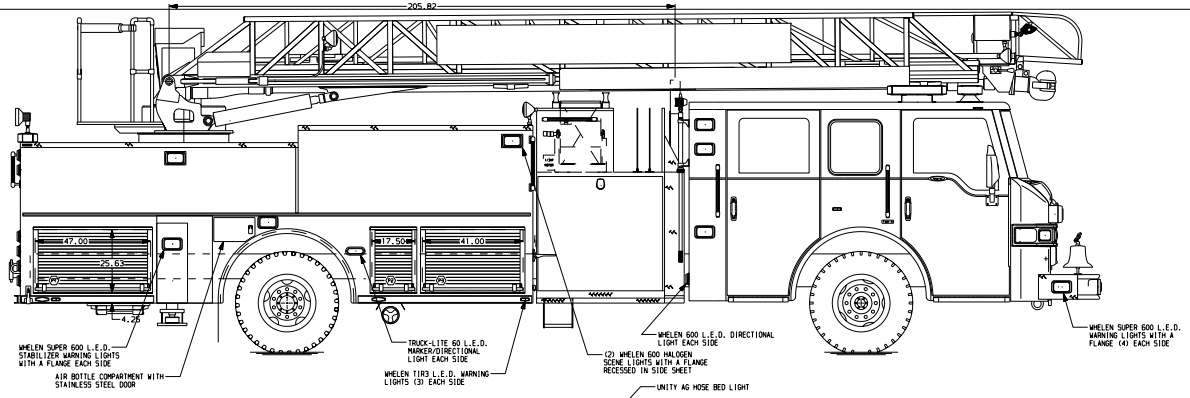

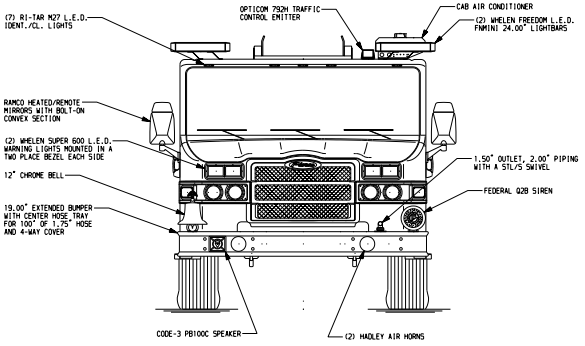

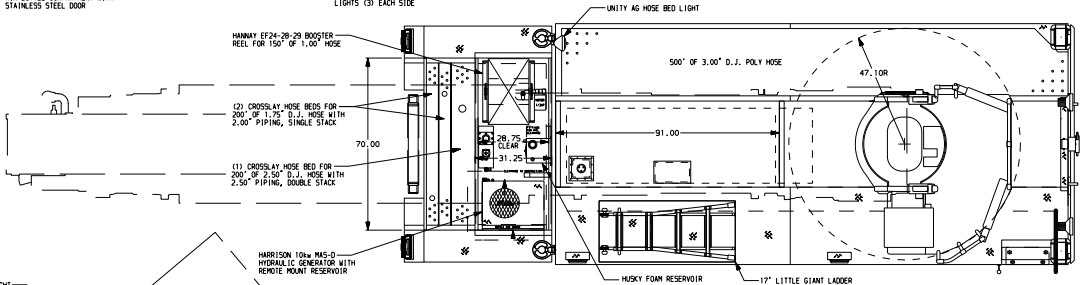

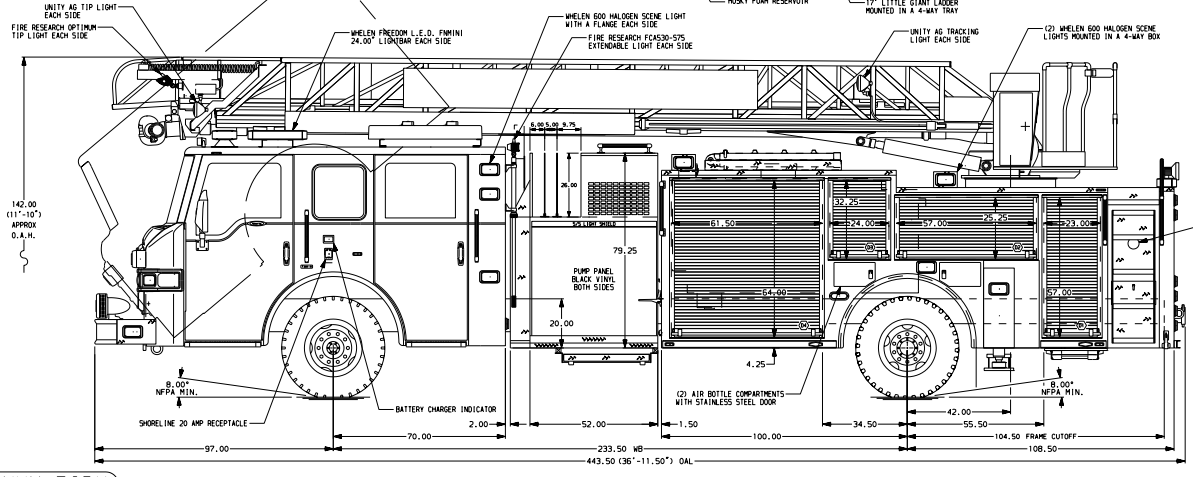

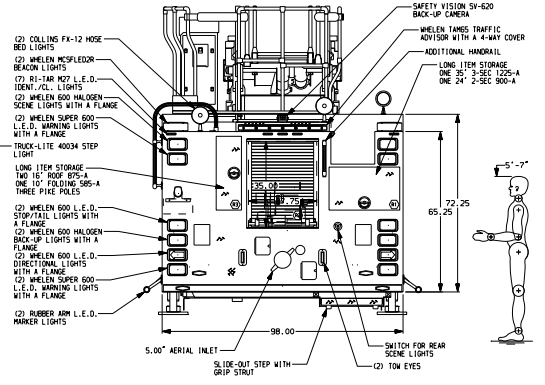

ALUMINUM BODY

NOTE

DIMENSIONS SHOWN ARE APPROXIMATE AND ARE SUBJECT TO MINOR DEVIATIONS AS MAY OCCUR OR BE NECESSARY IN CONSTRUCTION.
MINOR DETAILS NOT SHOWN.

1. AIR INLET WITH DISCONNECT COUPLING MOUNTED IN DRIVER SIDE STEP WELL
2. (2) 8.00"X14.00" WINDOWS ON CREW CAB REAR WALL
3. STAINLESS STEEL FENDER GOWNS ON CAB AND REAR BODY
4. RI-TAR M27 L.E.D. CAB AND CREW CAB STEP LIGHTS (2) EACH SIDE
5. ANTENNA MOUNTED ON CAB ROOF PER SHOP ORDER
6. BATTERY CHARGER LOCATED BEHIND DRIVER'S SEAT
7. 500 LB. FLOOR MOUNTED SLIDE-OUT TRAY IN COMPARTMENT-D4
8. VERTICAL PARTITION IN COMPARTMENT-D4
9. ALUMINUM FLOOR MOUNTED SLIDE-OUT TOOLBOARD IN COMPARTMENT-D4
10. PERIMETER SCENE LIGHTS LOCATED PER SHOP ORDER
11. 500 LB. ADJUSTABLE SHELVES SHIPPED LOOSE
12. CIRCUIT BREAKER PANEL IN COMPARTMENT-D3
13. LUMINESCENT FOLDING STEPS MOUNTED ON THE AERIAL DEVICE PER SHOP ORDER
14. 120V POWER TO AERIAL TIP
15. RADIO INTERCOM SYSTEM MOUNTED PER SHOP ORDER
16. AERIAL PEDESTAL RAISED 1.50"
17. HANNAY ECR1618-17-18 3-WIRE ELECTRIC REWIND CORD REEL WITH 200' OF 10/3 CABLE IN COMPARTMENT-R2
18. MUD FLAP WITH PIERCE LOGO AT REAR

REV	DATE	BY	CH
1	11JUN09	BST	JJA
2	20MAY09	BST	GRM

CHASSIS DATA
MAKE: PIERCE
MODEL: VXL7000

Pierce MANUFACTURING INC.

TITLE: 75 AERIAL LADDER & BODY ASSEMBLY
500 GALLON WATER TANK-480 GAL. WATER/20 GAL. FOAM

FOR: SIUSLAW VALLEY FIRE AND RESCUE
FLORENCE, OR

DWG NO. 21777AD

JOB NO.	21777
SCALE 1:24	DATE
DRAWN BY BST	24FEB09
CHECKED BY JBL	24FEB09
SHEET SIZE D	SHEET NO. 1 OF 1

View File Created 11-JUN-2009 11:46:31