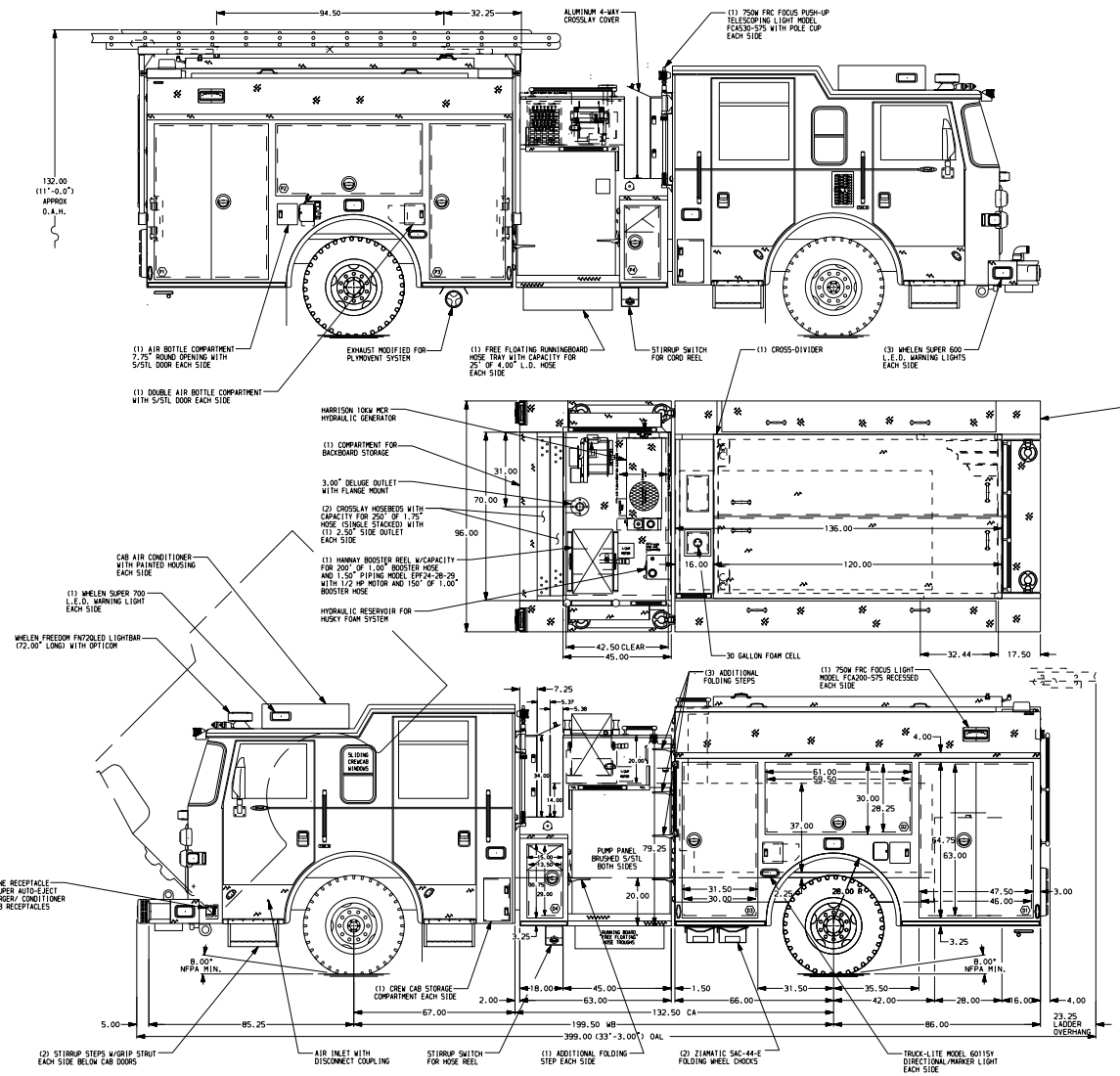

ALUMINUM BODY

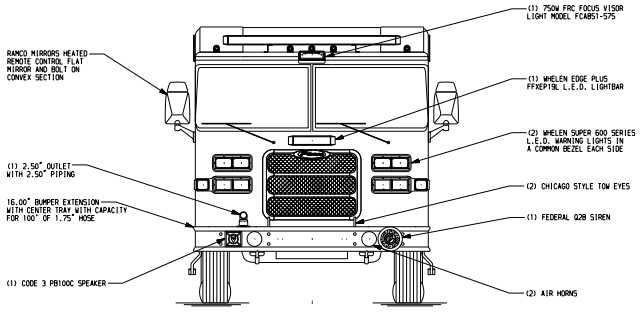

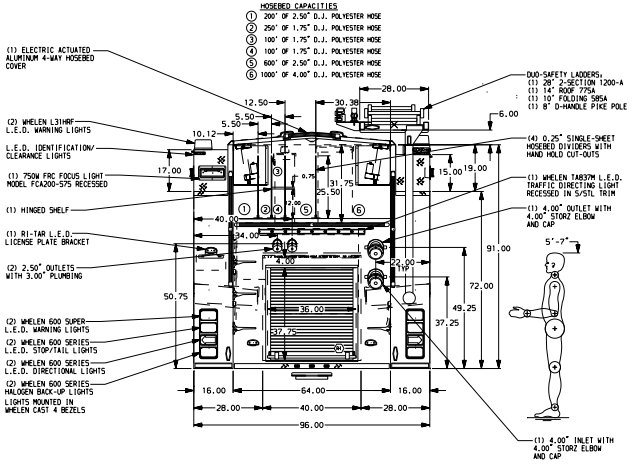

SIDE ROLL PROTECTION

NOTE

DIMENSIONS SHOWN ARE APPROXIMATE AND ARE SUBJECT TO MINOR DEVIATIONS AS MAY OCCUR OR BE NECESSARY IN CONSTRUCTION.
MINOR DETAILS NOT SHOWN.

1. PIERCE LOGO MUDFLAPS LOCATED FRONT AND REAR
2. S/STL FENDER CROWNS LOCATED FRONT AND REAR
3. S/STL SCUFFPLATE ON EACH CAB DOOR JAMB
4. S/STL SCUFFPLATE ON REAR OUTER CORNERS OF CAB
5. MOUNTING BASES FOR ANTENNAS LOCATED PER SHOP ORDER
6. KUSSMAUL BATTERY CHARGER LOCATED IN COMPARTMENT D3
7. PULL STRAP ON DOOR IN COMPARTMENTS D2 & P2
8. REVERSE HINGED DOOR ON COMPARTMENT D3
9. ONE FLOOR MOUNTED SLIDE-OUT TRAY IN COMPARTMENT R1
10. ALUMINUM PEGBOARD ON THE REAR WALL OF COMPARTMENT P2
11. TWO ADJUSTABLE SHELVES IN COMPARTMENTS D1 & P1, THREE IN D3 & P3
12. ONE 6' DUO-SAFETY D-HANDLE PIKE POLE SHIPPED LOOSE
13. PERIMETER SCENE LIGHTS LOCATED PER SHOP ORDER
14. CIRCUIT BREAKER PANEL IN COMPARTMENT D3
15. ONE HANNAY ELECTRIC REWIND CORD REEL MODEL 1616-17-18 LOCATED IN P.S. OF CARGO AREA WITH 150' OF 10/3 CABLE WITH CIRCLE-D JUNCTION BOX AND HOLDER
16. TWO 20A DUPLEX RECEPTACLES LOCATED IN CAB

REV	DATE	BY	CH
2	06APR10	MBO	KBO
1	22FEB10	MBO	KBO

CUSTOMER APPROVAL
APPROVED BY: _____
DATE: _____

Pierce MANUFACTURING INC.

CHASSIS DATA
MAKE: PIERCE
MODEL: AXT6710

TITLE: 1750-D-600 GAL POLY TANK W/30 GAL FOAM CELL, 152" F HGT FRONT & REAR COMPTS, 2" DEEPER THAN STD UPPER
FOR: SNOHOMISH COUNTY FIRE DISTRICT, SNOHOMISH, WA
DWG NO. 23105AD

JOB NO. 23105 01-02
SCALE 1:24
DATE
DRAWN BY MBO 11JAN10
CHECKED BY KBO 13JAN10
SHEET SIZE D
SHEET NO. 1 OF 1

View File Created 12-APR-2010 10:28:35