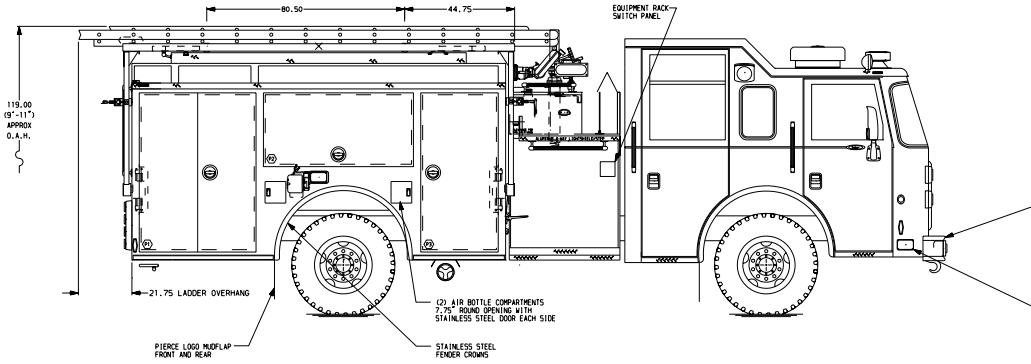

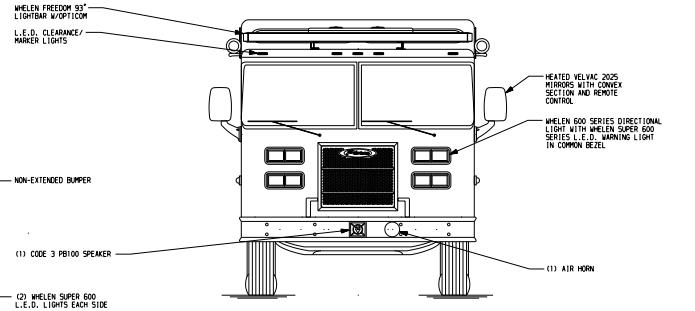

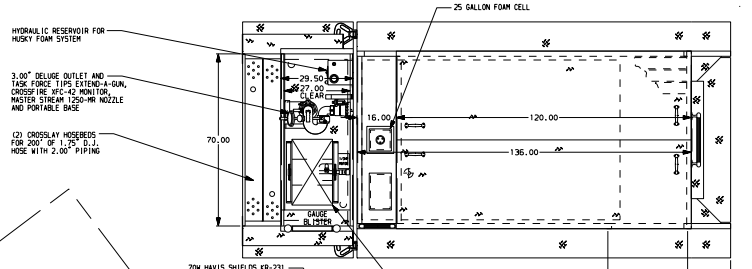

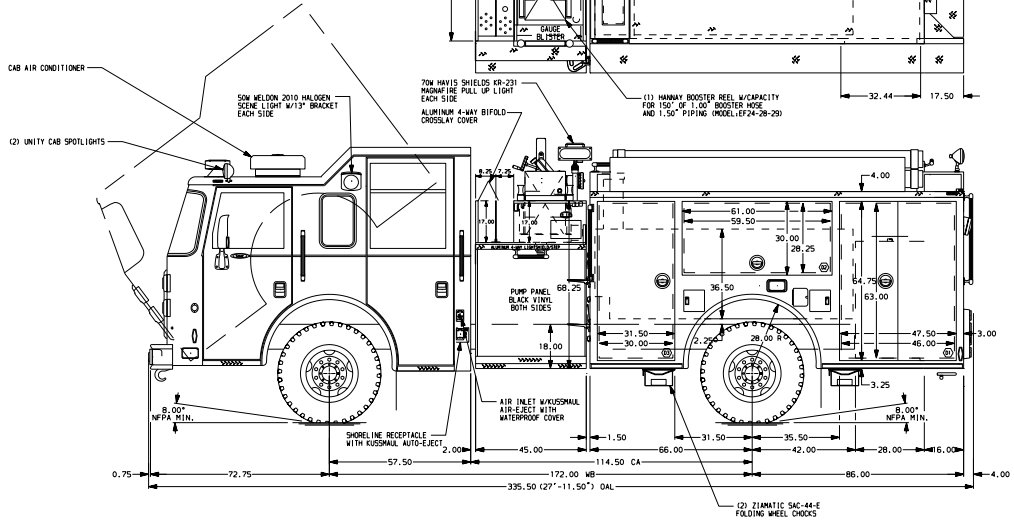

HOSEBED CAPACITIES

1. - 750' OF 2.50" D.J.P. HOSE
2. - 750' OF 2.50" D.J.P. HOSE
3. - 200' OF 1.75" D.J.P. HOSE
4. - 200' OF 1.75" D.J.P. HOSE

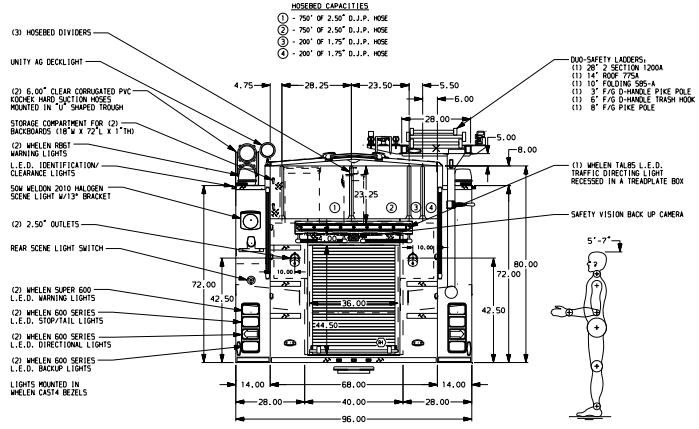

ALUMINUM BODY

NOTE

DIMENSIONS SHOWN ARE APPROXIMATE AND ARE SUBJECT TO MINOR DEVIATIONS AS MAY OCCUR OR BE NECESSARY IN CONSTRUCTION.
MINOR DETAILS NOT SHOWN.

1. PUMP PANEL DRAWING REQUIRED
2. BATTERY CHARGER LOCATED IN CREW CAB SEAT RISER
3. MOUNTING BASE FOR ANTENNA LOCATED PER SHOP ORDER
4. 5/STL SCUFFPLATE (8.00" HIGH) ON INSIDE DOOR OF COMPARTMENTS D1, D3, P1 & P3
5. ONE FLOOR MOUNTED SLIDE-OUT TRAY IN COMPARTMENT R1
6. ONE ADJUSTABLE SLIDE-OUT TRAY IN COMPARTMENT R1
7. BOLT-IN PARTITION BETWEEN COMPARTMENTS D1-R1 & P1-R1
8. ONE VERTICAL PARTITION IN COMPARTMENT D3
9. TWO ADJUSTABLE SHELVES (FULL DEPTH/FULL WIDTH) IN COMPARTMENTS IN D1, P1 & P2; THREE EACH IN D3 & P3
10. ZICO NOZZLE CUP LOCATED ON DRIVER SIDE FRONT BULKHEAD
11. HOT WATER HEATER IN PUMP COMPARTMENT
12. L.E.D. PERIMETER SCENE LIGHTS LOCATED PER SHOP ORDER
13. PAINTED ALUMINUM PIVOTING TOOLBOARD LOCATED IN COMPARTMENT D2
14. PULL STRAP W/12" EXTENSION LOCATED ON DOORS OF COMPARTMENTS D2 & P2
15. FIVE 120V DUPLEX RECEPTACLES LOCATED PER SHOP ORDER

REV	DATE	BY	CH
V	31AUG09	BZI	KBO
V	28JUL09	BZI	KBO
V	28MAY09	BZI	KBO

CUSTOMER APPROVAL
APPROVED BY: _____
DATE: _____

CHASSIS DATA
MAKE: PIERCE
MODEL: SABER

Pierce MANUFACTURING INC.

TITLE: 1500-D-750 GAL POLY W/25 GAL FOAM CELL, 152" BODY FULL HEIGHT, SIDE CONTROL, HLR, DELUGE, (2) X-LAYS
FOR: SPOKANE FIRE DISTRICT #9 MEAD, WASHINGTON
DWG NO. 22380AD

JOB NO. 22380
SCALE 1:24
DATE
DRAWN BY BZI 11MAY09
CHECKED BY KBO 22MAY09
SHEET SIZE D
SHEET NO. 1 OF 1

View File Created 31-AUG-2009 14:38:53