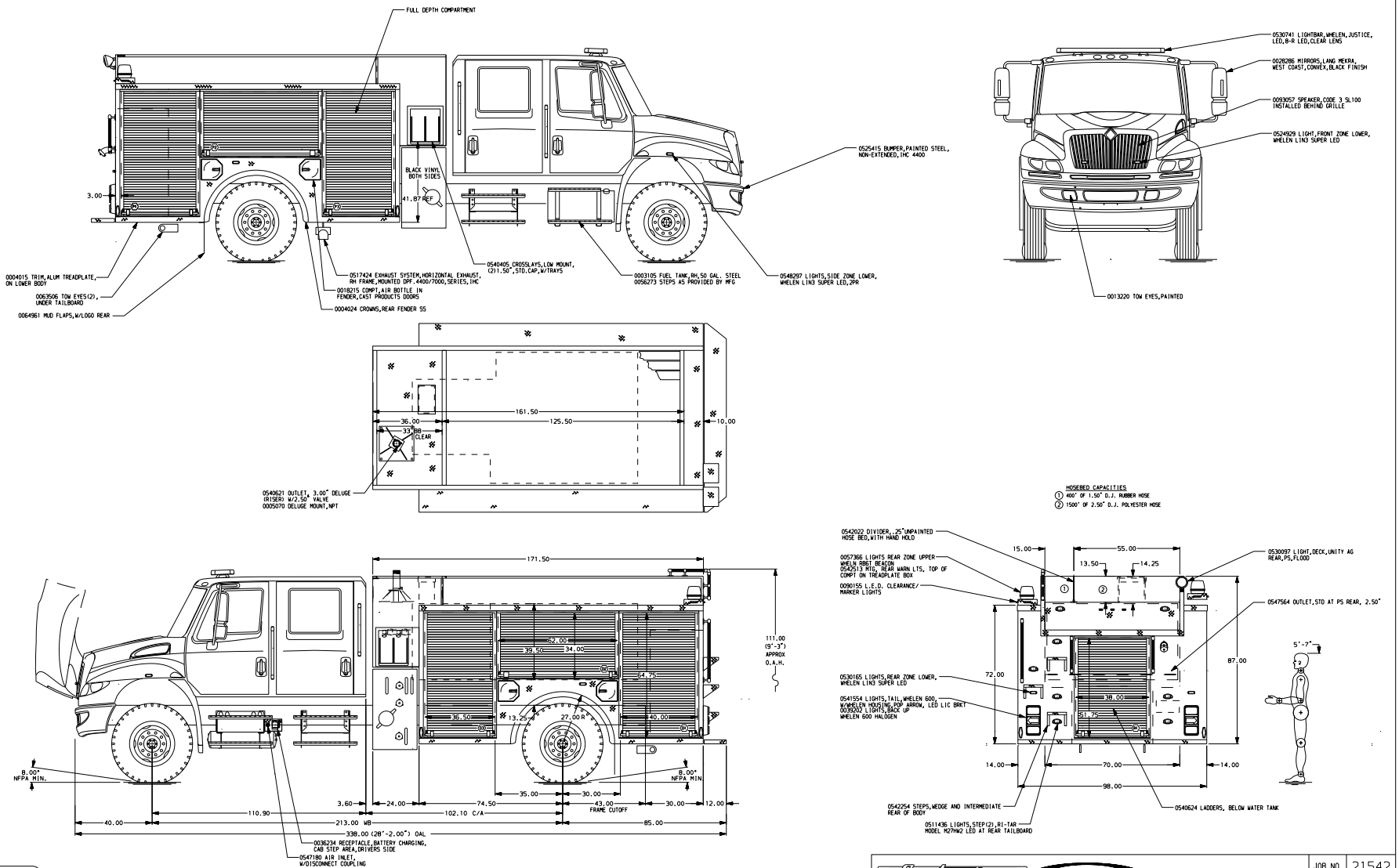

ALUMINUM BODY

NOTE

DIMENSIONS SHOWN ARE APPROXIMATE AND ARE SUBJECT TO MINOR DEVIATIONS AS MAY OCCUR OR BE NECESSARY IN CONSTRUCTION.
MINOR DETAILS NOT SHOWN.

BOTTLES IN W/W

Contender Pierce MANUFACTURING INC.
BRADENTON, FLORIDA

REV	DATE	BY	CH
B	7MAY09	AIV	PK2
A	4DEC08	AIV	PK1

CHASSIS DATA	TITLE	1250-D-1000 POLY 148.5"BODY DS FULL HT PS LOW (2)SPEEDLAYS	
MAKE IHC	FOR	PIERCE STOCK BRADENTON, FLORIDA	
MODEL 4400	DWG NO.	21542AD	

JOB NO.	21542
SCALE 1:24	DATE
DRAWN BY AIV	10SEP08
CHECKED BY DTA	07MAY09
SHEET SIZE D	SHEET NO. 1 OF 1

View File Created 07-MAY-2009 09:46:16