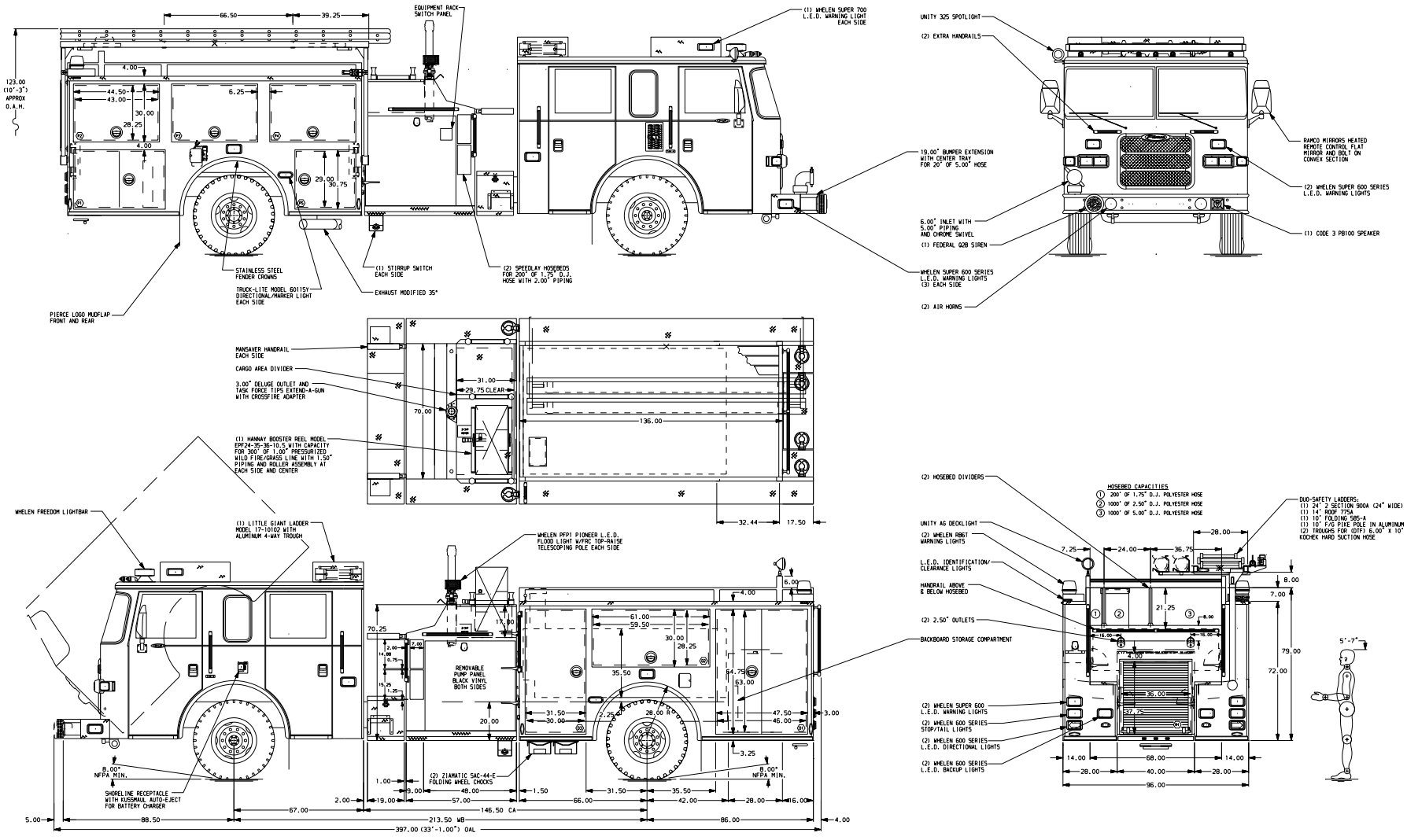

ALUMINUM BODY

NOTE

DIMENSIONS SHOWN ARE APPROXIMATE AND ARE SUBJECT TO MINOR DEVIATIONS AS MAY OCCUR OR BE NECESSARY IN CONSTRUCTION.
MINOR DETAILS NOT SHOWN.

1. S/STL SCUFFPLATE ON EACH CAB DOOR JAMB
2. S/STL SCUFFPLATE ON REAR OUTER CORNERS OF CAB
3. S/STL SCUFFPLATE ON REAR INNER & OUTER CORNER OF BODY
4. S/STL SCUFFPLATE ON BOTTOM EDGE OF DOOR FRAMING OF ALL SIDE BODY COMPARTMENTS
5. BOLT-IN PARTITION WITH CUT-OUT BETWEEN COMPARTMENTS P1 & R1
6. HORIZONTAL EQUIPMENT MOUNTING TRACKS IN COMPARTMENTS D2, P2, P3 & P4
7. ONE ADJUSTABLE SHELF IN COMPARTMENTS D1, P1, P5 & R1; TWO IN D3
8. NO VERTICAL PARTITIONS BETWEEN COMPARTMENTS P2 & P3 AND P3 & P4
9. PERIMETER SCENE LIGHTS LOCATED PER SHOP ORDER
10. RADIO ANTENNA MOUNTS LOCATED PER SHOP ORDER
11. BATTERY CHARGER LOCATED IN CAB BEHIND DRIVER'S SEAT
12. AIR INLET WITH DISCONNECT COUPLING LOCATED IN DRIVER'S SIDE STEP WELL
13. AMDOR L.E.D. STRIP LIGHT ON EACH SIDE OF EACH BODY COMPARTMENT DOOR

REV	DATE	BY	CH
7	26JUN09	BZI	KBO
8	29MAY09	BZI	KBO
9	27MAR09	BZI	KBO

CUSTOMER APPROVAL
APPROVED BY: _____
DATE: _____

Pierce MANUFACTURING INC.

CHASSIS DATA	
MAKE	PIERCE
MODEL	AXT6700
TITLE	1500-D-750 GAL POLY, 152" BODY FH FRONT & RR DS, (3) LIFT UPS PS, (2) SPEEDLAYS, TOP MOUNT
FOR	WHITNEY FIRE PROTECTION DISTRICT BOISE, IDAHO
DWG NO.	22143AD

JOB NO.	22143
SCALE	1:24
DATE	
DRAWN BY	BZI
17MAR09	
CHECKED BY	KBO
23MAR09	
SHEET SIZE	D
SHEET NO.	1 OF 1

View File Created 30-JUN-2009 09:27:30